# KTHL1,2,5,8
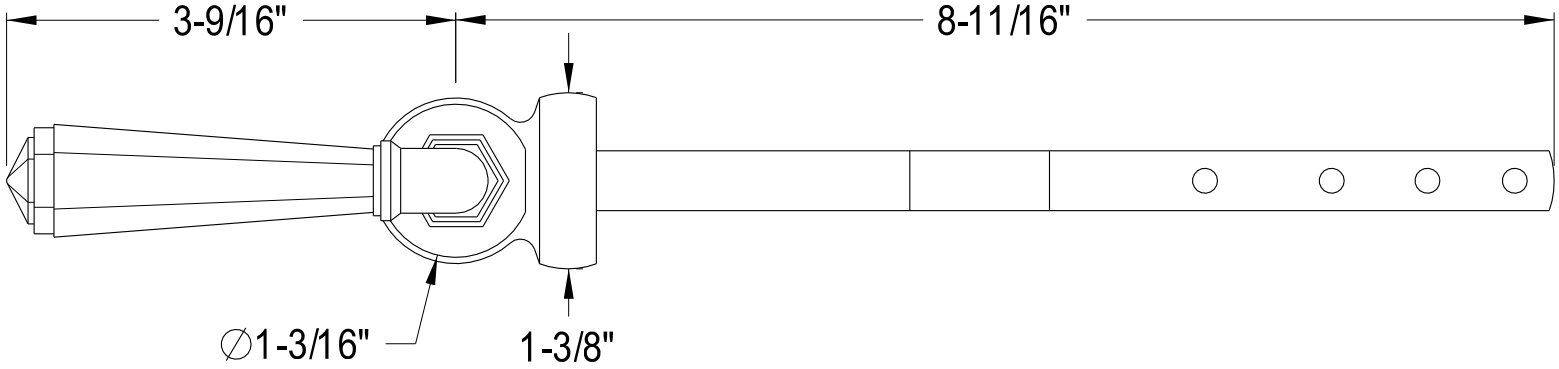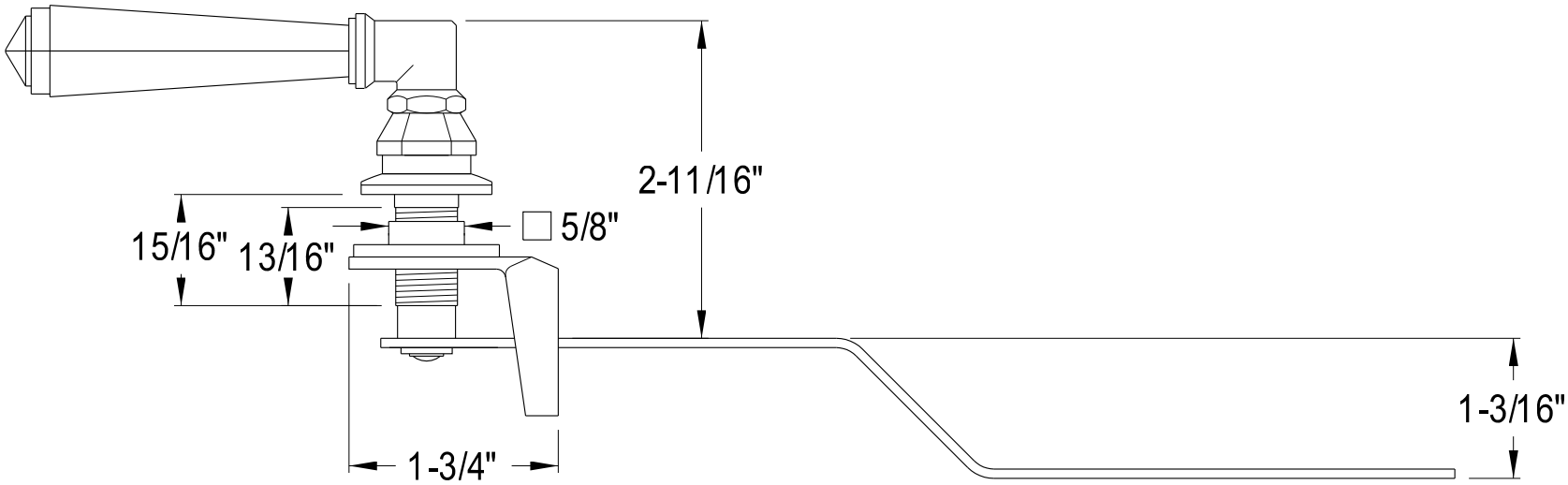
Tank Lever